DocuSign Envelope ID: 4832F6CB-7910-4F07-BB86-D8AD5CC9DF82

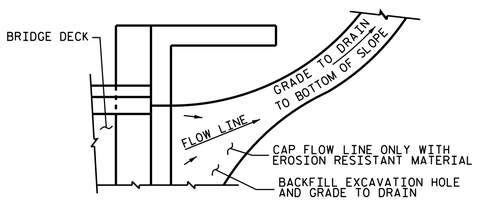

NOTE: IF THE APPROACH SLAB IS NOT CONSTRUCTED IMMEDIATELY AFTER THE BACKFILLING OF THE END BENT EXCAVATION, GRADE TO DRAIN TO THE BOTTOM OF THE SLOPE AND PROVIDE EROSION RESISTANT MATERIAL, SUCH AS FIBERGLASS ROVING OR AS DIRECTED BY THE ENGINEER TO PREVENT SOIL EROSION AND TO PROTECT THE AREA ADJACENT TO THE STRUCTURE. THE CONTRACTOR WILL BE REQUIRED TO REMOVE THESE MATERIALS PRIOR TO CONSTRUCTION OF THE APPROACH SLAB.

TEMPORARY DRAINAGE DETAIL

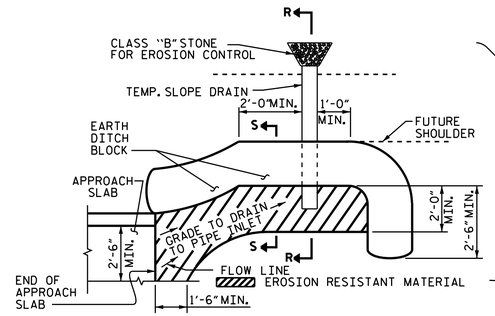

NOTE: IMMEDIATELY AFTER THE CONSTRUCTION OF THE APPROACH SLAB, THE CONTRACTOR SHALL PROVIDE TEMPORARY BERM AND SLOPE DRAIN. CONTRACTOR SHALL GRADE TO PIPE INLET AND PROVIDE EROSION RESISTANT MATERIAL AS SHOWN. THE EROSION RESISTANT MATERIAL SHALL BE EITHER 1) ASPHALT PLANT MIX, TYPE 1 OR TYPE 2, MIN. 2" DEPTH, 2) EROSION CONTROL MAT, OR 3) CONCRETE, AS DIRECTED BY THE ENGINEER. THE SLOPE DRAIN SHALL CONSIST OF A NON-PERFORATED TEMPORARY DRAINAGE PIPE, 12 INCHES IN DIAMETER.

PLAN VIEW

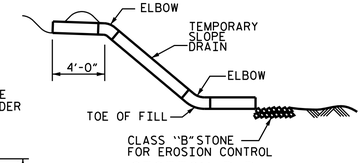

SECTION R-R

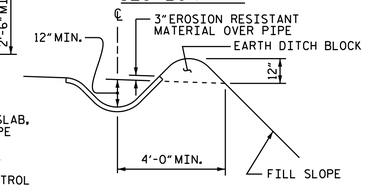

SECTION S-S

TEMPORARY BERM AND SLOPE DRAIN DETAILS

(TO BE USED WHEN SHOULDER BERM GUTTER IS REQUIRED)

BILL OF MATERIAL

APPROACH SLAB AT EB #1

BAR	NO.	SIZE	TYPE	LENGTH	WEIGHT
✱ A1	13	#4	STR	27'-10"	242
A2	13	#4	STR	27'-10"	242
✱ B1	56	#5	STR	11'-2"	652
B2	56	#6	STR	11'-8"	981
REINFORCING STEEL				LBS.	1223
✱ EPOXY COATED REINFORCING STEEL				LBS.	894
CLASS AA CONCRETE				C. Y.	16.6

APPROACH SLAB AT EB #2

BAR	NO.	SIZE	TYPE	LENGTH	WEIGHT
✱ A3	26	#4	STR	17'-6"	304
A4	26	#4	STR	17'-4"	301
✱ B1	56	#5	STR	11'-2"	652
B2	56	#6	STR	11'-8"	981
✱ B3	1	#5	STR	7'-8"	8
✱ B4	1	#5	STR	5'-10	6
✱ B5	1	#5	STR	4'-7"	5
✱ B6	2	#5	STR	3'-11"	8
✱ B7	1	#5	STR	7'-2"	7
✱ B8	1	#5	STR	8'-2"	9
✱ B9	1	#5	STR	6'-0"	6
✱ B10	1	#5	STR	4'-4"	5
✱ B11	1	#5	STR	3'-0"	3
✱ B12	1	#5	STR	2'-5"	3
✱ B13	1	#5	STR	11'-3"	12
B14	1	#6	STR	7'-8"	12
B15	1	#6	STR	5'-10"	9
B16	1	#6	STR	4'-7"	7
B17	2	#6	STR	3'-11"	12
B18	1	#6	STR	7'-2"	11
B19	1	#6	STR	8'-2"	12
B20	1	#6	STR	6'-0"	9
B21	1	#6	STR	4'-4"	7
B22	1	#6	STR	3'-0"	5
B23	1	#6	STR	2'-5"	4
B24	1	#6	STR	11'-3"	17
REINFORCING STEEL				LBS.	1,387
✱ EPOXY COATED REINFORCING STEEL				LBS.	1,028
CLASS AA CONCRETE				C. Y.	18.2

SPLICE LENGTHS

BAR SIZE	EPOXY COATED	UNCOATED
#4	1'-11"	1'-7"
#5	2'-5"	2'-0"
#6	3'-7"	2'-5"

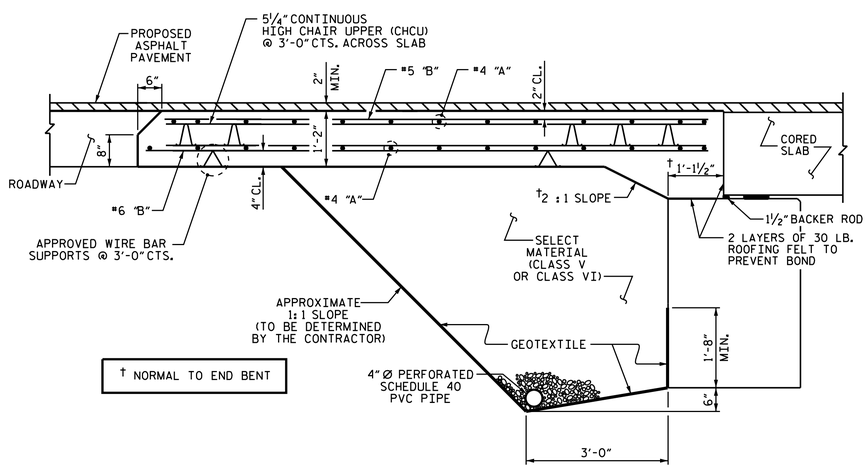

† NORMAL TO END BENT

SECTION THRU SLAB

(TYPE II - MODIFIED APPROACH FILL)

PROJECT NO. 17BP.11.R.145

ASHE COUNTY

STATION: 17+13.00-L-

SHEET 2 OF 2

NORTH CAROLINA PROFESSIONAL SEAL 20125 ENGINEER MARSHALL G. CHEEK, JR.

1/24/2022

DOCUMENT NOT CONSIDERED FINAL UNLESS ALL SIGNATURES COMPLETED

TGS ENGINEERS
804-C N. LAFAYETTE ST
SHELBY, NC 28150
PH (704) 476-0003
CORP. LICENSE NO.: C-0275

STATE OF NORTH CAROLINA
DEPARTMENT OF TRANSPORTATION
RALEIGH

STANDARD
BRIDGE APPROACH SLAB
FOR PRESTRESSED CONCRETE
CORED SLAB UNIT
(SUB-REGIONAL TIER)
90° SKEW

REVISIONS						
NO.	BY:	DATE:	NO.	BY:	DATE:	
1			3			
2			4			

SHEET NO. S-29

TOTAL SHEETS 30

ASSEMBLED BY : NMW	DATE : 6/21		
CHECKED BY : MGC	DATE : 6/21		
DRAWN BY : SHS/MAA 5-09	REV. 12-17	MAA/THC	
CHECKED BY : BCH 5-09	REV. 08-19	BNB/THC	

STD. NO. BAS_30_90S