DocuSign Envelope ID: 4832F6CB-7910-4F07-BB86-D8AD5CC9DF82

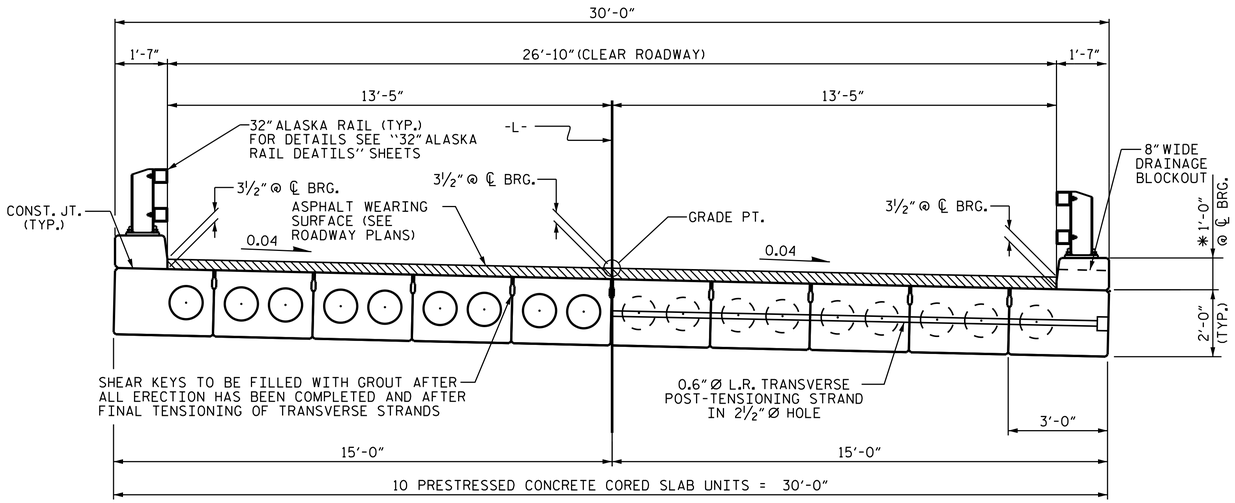

HALF SECTION
THROUGH VOIDS

HALF SECTION
AT INTERMEDIATE DIAPHRAGMS

TYPICAL SECTION

✳ - THE MAXIMUM CURB HEIGHT AND ASPHALT WEARING SURFACE THICKNESS IS SHOWN. THE HEIGHT OF THE CURB AND ASPHALT WEARING SURFACE THICKNESS VARIES WHILE THE TOP OF THE CURB FOLLOWS THE PROFILE OF THE GUTTERLINE. FOR CURB HEIGHT DETAILS, SEE "32" ALASKA RAIL CURB SECTION" DETAIL.

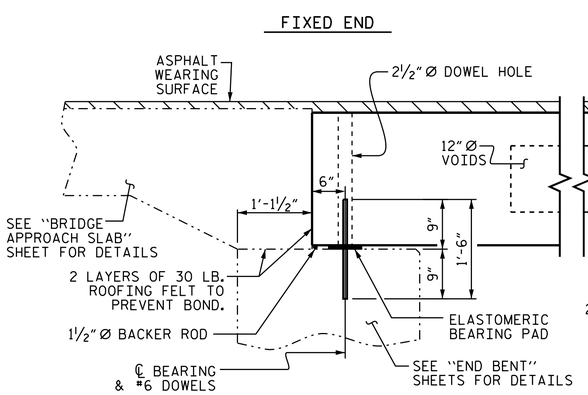

SECTION AT END BENT

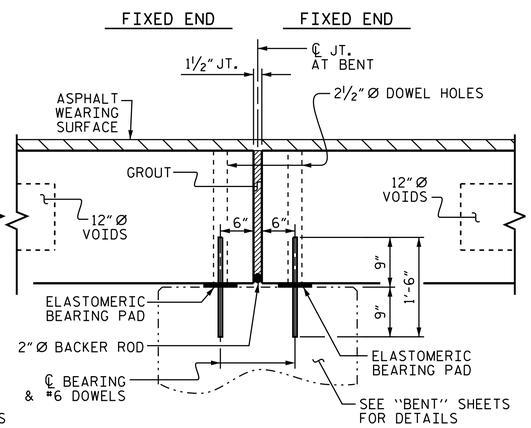

SECTION AT BENT

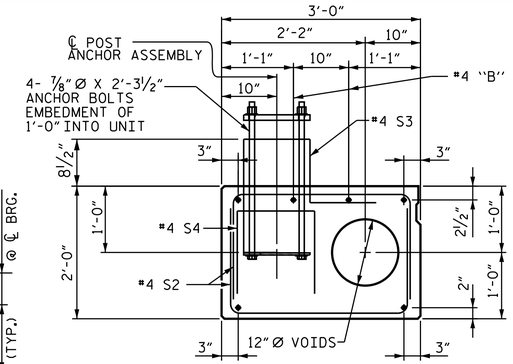

EXTERIOR SLAB SECTION

(FOR PRESTRESSED STRAND LAYOUT, SEE INTERIOR SLAB SECTION.)

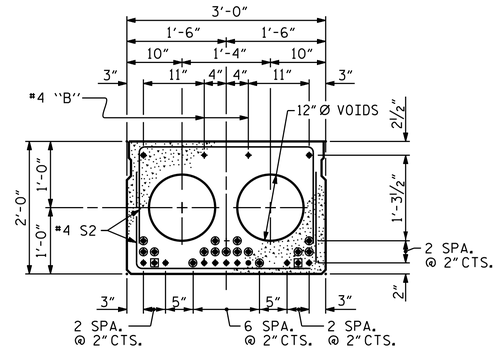

INTERIOR SLAB SECTION (40' UNIT)

(13 STRANDS REQUIRED)

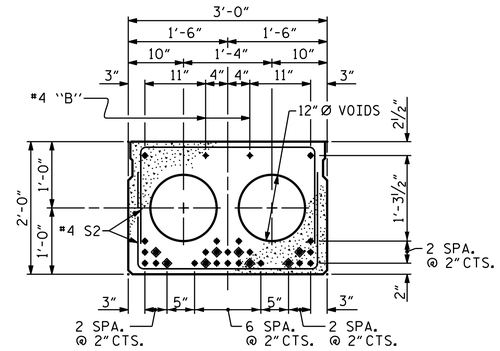

INTERIOR SLAB SECTION (70' UNIT)

(28 STRANDS REQUIRED)

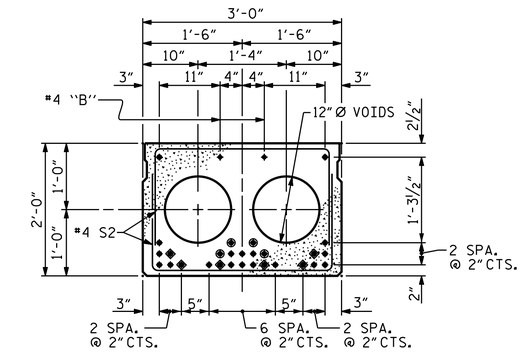

INTERIOR SLAB SECTION (60' UNIT)

(24 STRANDS REQUIRED)

0.6" Ø LOW RELAXATION STRAND LAYOUT

◆ BOND SHALL BE BROKEN ON THESE STRANDS FOR A DISTANCE OF 12'-0" FROM END OF CORED SLAB UNIT. SEE STANDARD SPECIFICATIONS, ARTICLE 1078-7.

◘ BOND SHALL BE BROKEN ON THESE STRANDS FOR A DISTANCE OF 2'-0" FROM END OF CORED SLAB UNIT. SEE STANDARD SPECIFICATIONS, ARTICLE 1078-7.

◉ OPTIONAL FULL LENGTH DEBONDED STRANDS. THESE STRANDS ARE NOT REQUIRED. IF THE FABRICATOR CHOOSES TO INCLUDE THESE STRANDS IN THE CORED SLAB UNIT, THE STRANDS SHALL BE DEBONDED FOR THE FULL LENGTH OF THE UNIT AT NO ADDITIONAL COST. SEE STANDARD SPECIFICATIONS, ARTICLE 1078-7.

DEBONDING LEGEND

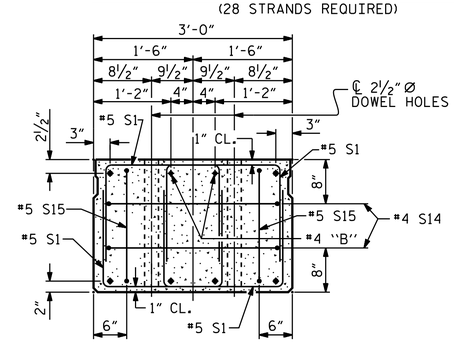

END ELEVATION

SHOWING PLACEMENT OF DOUBLE STIRRUPS AND LOCATION OF DOWEL HOLES. (STRAND LAYOUT NOT SHOWN.) INTERIOR SLAB UNIT SHOWN-EXTERIOR SLAB UNIT SIMILAR EXCEPT SHEAR KEY LOCATION.

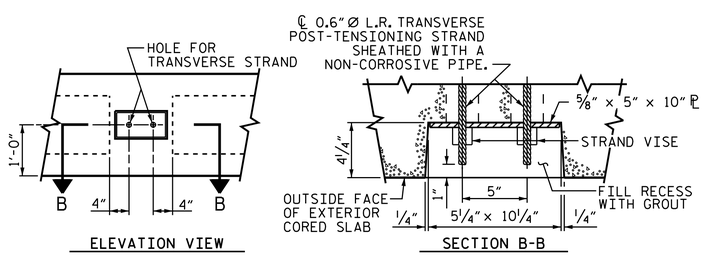

GROUTED RECESS AT END OF POST-TENSIONED STRAND SPANS B & C

FOR SPAN A, SEE SHEET 2 OF 6

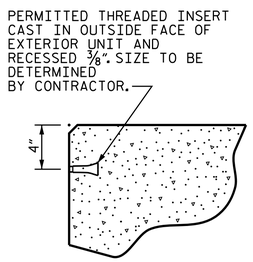

THREADED INSERT DETAIL

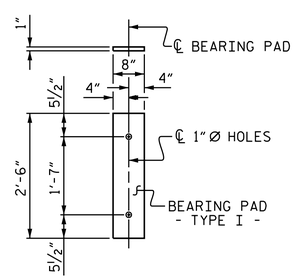

FIXED END
(TYPE I - 60 REQ'D)

ELASTOMERIC BEARING DETAILS

ELASTOMER IN ALL BEARINGS SHALL BE 60 DUROMETER HARDNESS.

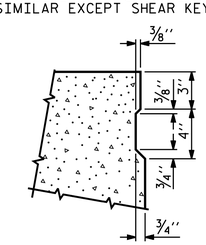

SHEAR KEY DETAIL

NOTE: OMIT SHEAR KEY ON OUTSIDE FACE OF EXTERIOR CORED SLABS.

PROJECT NO. 17BP.11.R.145

ASHE COUNTY

STATION: 17+13.00-L-

SHEET 1 OF 6

NORTH CAROLINA PROFESSIONAL SEAL 20125 ENGINEER MARSHALL G. CHEEK, JR.
1/24/2022

DOCUMENT NOT CONSIDERED FINAL UNLESS ALL SIGNATURES COMPLETED

TGS ENGINEERS
804-C N. LAFAYETTE ST
SHELBY, NC 28150
PH (704) 476-0003
CORP. LICENSE NO.: C-0275

STATE OF NORTH CAROLINA
DEPARTMENT OF TRANSPORTATION
RALEIGH

3'-0" X 2'-0"
PRESTRESSED CONCRETE CORED SLAB UNITS
90° SKEW

REVISIONS						SHEET NO.
NO.	BY:	DATE:	NO.	BY:	DATE:	S-8
1			3			TOTAL SHEETS
2			4			30

DRAWN BY :	NMW	DATE :	6/21
CHECKED BY :	MGC	DATE :	6/21
DESIGN ENGINEER OF RECORD :	ZCS	DATE :	8/21